INSTRUCTION SHEET

ELECTRIC ROTATION / DEFLECTOR

APPLICATION

Deflector for: B74, B84 & B94, SBG1074, SBG1084 and SBG1094.
Rotation for: H64, H76 & H84 (serial#: 2704699 or SHT04699 and less)
and B74 (serial#: SMT107319 and less), B84, B94 (8046 kit required).

INSTALLATION

PRE-ASSEMBLY

1. **Figure 1A:** Install the clevis with a 1 1/32" diam. hole (item 1) on the actuator base (item 2), and the one with a 1 5/32" diam. hole (item 3) on the other end, and secure with two 1/2" NC x 2 1/2" bolts and two 1/2" NC nylon insert locknuts (items 4-5).
2. **Figure 1A:** Insert a 3/16" x 1 3/4" spring pin (item 6) in each 1" pin (item 7).
3. **Figure 1 & diagram:** Connect wires to switch as follows:
   - 72" black ground wire (item 1) to "C" terminal.
   - 72" red fuse wire (item 3) to "B" terminal.
   - 360" red & black actuator wires (item 4) au "A" and "D" terminals.

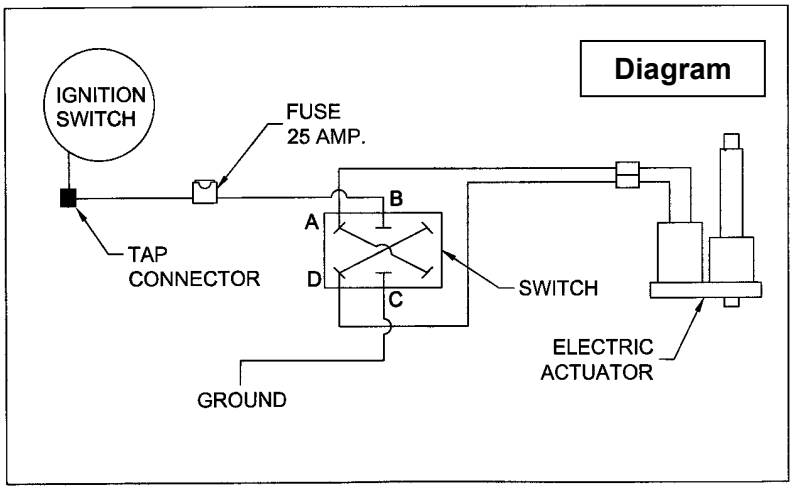

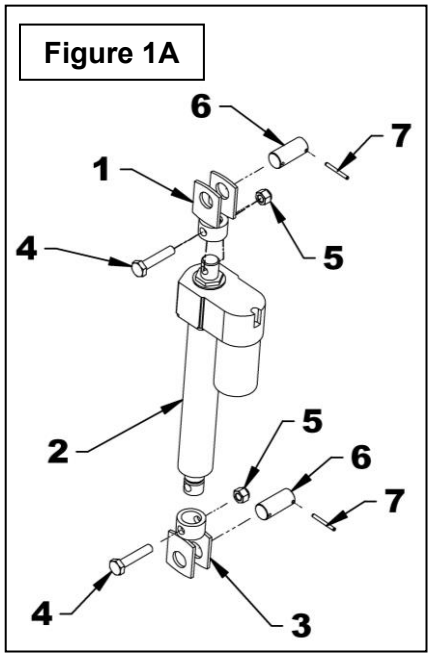

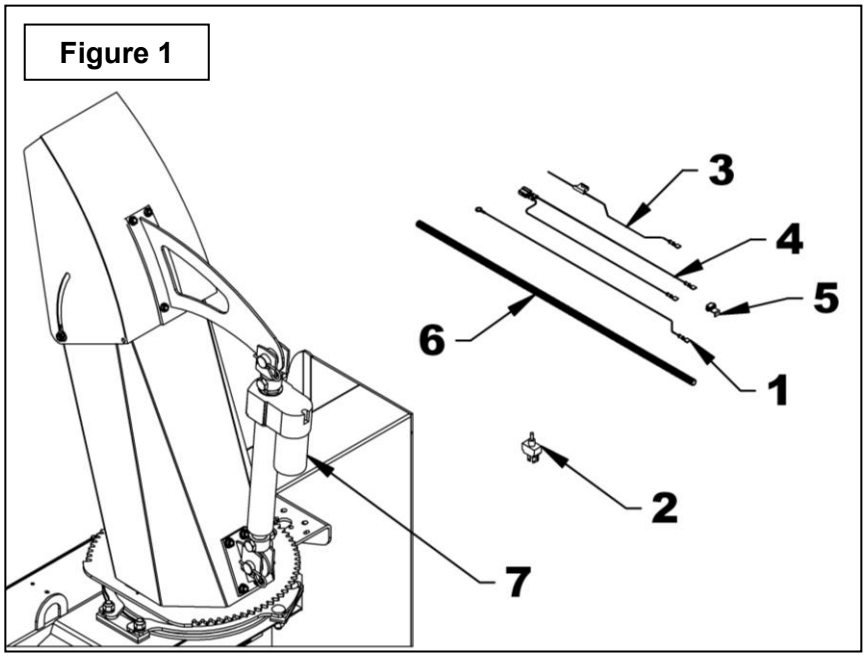

ASSEMBLY - DEFLECTOR
(Figures 2-2A)

For Chute with knob adjustment:

1. **Figure 2:** Remove the two manual adjustment knobs and the bolts on each deflector side (item 11) and replace with two 5/16” NC x 3/4” carriage bolts (item 1), the original nylon insert locknuts (item 2) and two 5/16"NC nylon insert locknut (item 3). Leave a 1/16" play.
2. **Figure 2:** Place the deflector bracket (item 5) in the middle of the chute deflector, and align with the bottom edge of the deflector. Using the bracket as a template, drill four 1/2" holes in the deflector.
3. **Figure 2:** Secure in place with four 5/16" NC x 3/4" allen flat head setscrews (item 4) and 5/16" serrated flange nuts (item 6), placing the setscrew head inside the chute. Tighten until the setscrew head sinks into the inside surface of the deflector.
4. **Figure 2:** Retract completely the pre-assembled actuator rod (item 10). Attach the actuator to the deflector bracket (item 5) and to the base bracket (item 7), with two 1" pins (item 8) and secure with two hairpins (item 9).
5. **Figure 2:** Open deflector completely, making sure the actuator is completely closed. Place the base bracket (item 7) in the rear center of the chute. Using the bracket as a template, drill four 1/2" holes in the chute.
6. **Figure 2:** Attach the base bracket with four 5/16" allen flat head setscrews (item 4) and 5/16" serrated flange nuts (item 6) placing the setscrew head inside the chute. Tighten until the setscrew head sinks into the inside surface.

For Chute with telescopic adjustment rod:

Figure 2A: Install the pre-assembled actuator (item 10) on the chute in the illustrated position with two 1" pins (item 8) and secure with two 4mm x 80mm hairpins (item 9).

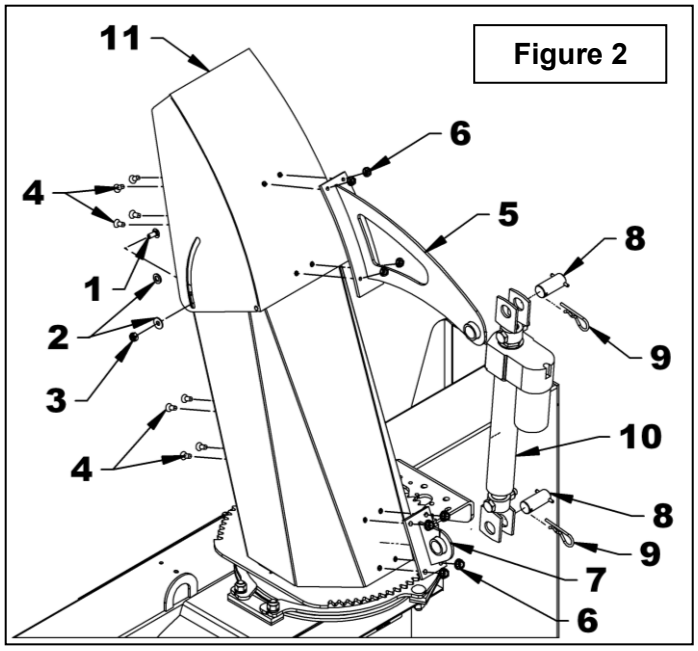

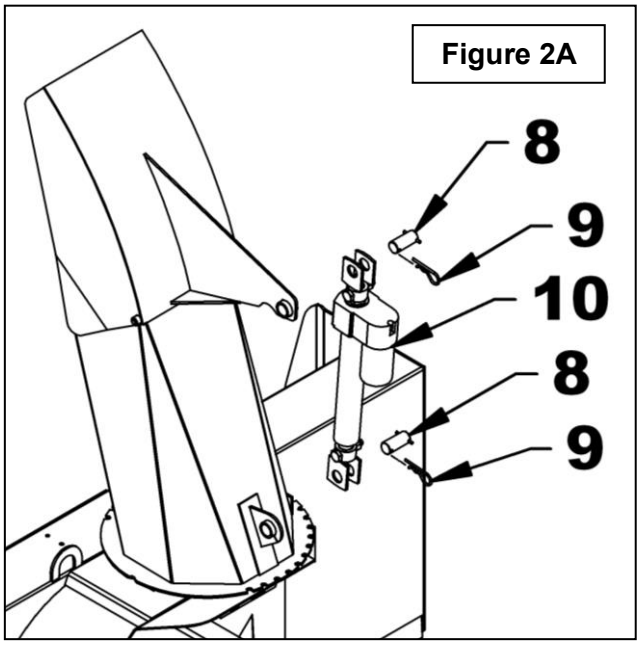

ASSEMBLY - ROTATION
(Figure 2C)

Install the actuator pre-assembly on the rotation mechanism (8046 kit required), in the position illustrated on figure with the two 1" pins (item 1) and secure with two 4mm x 80mm hair pins (item 2).

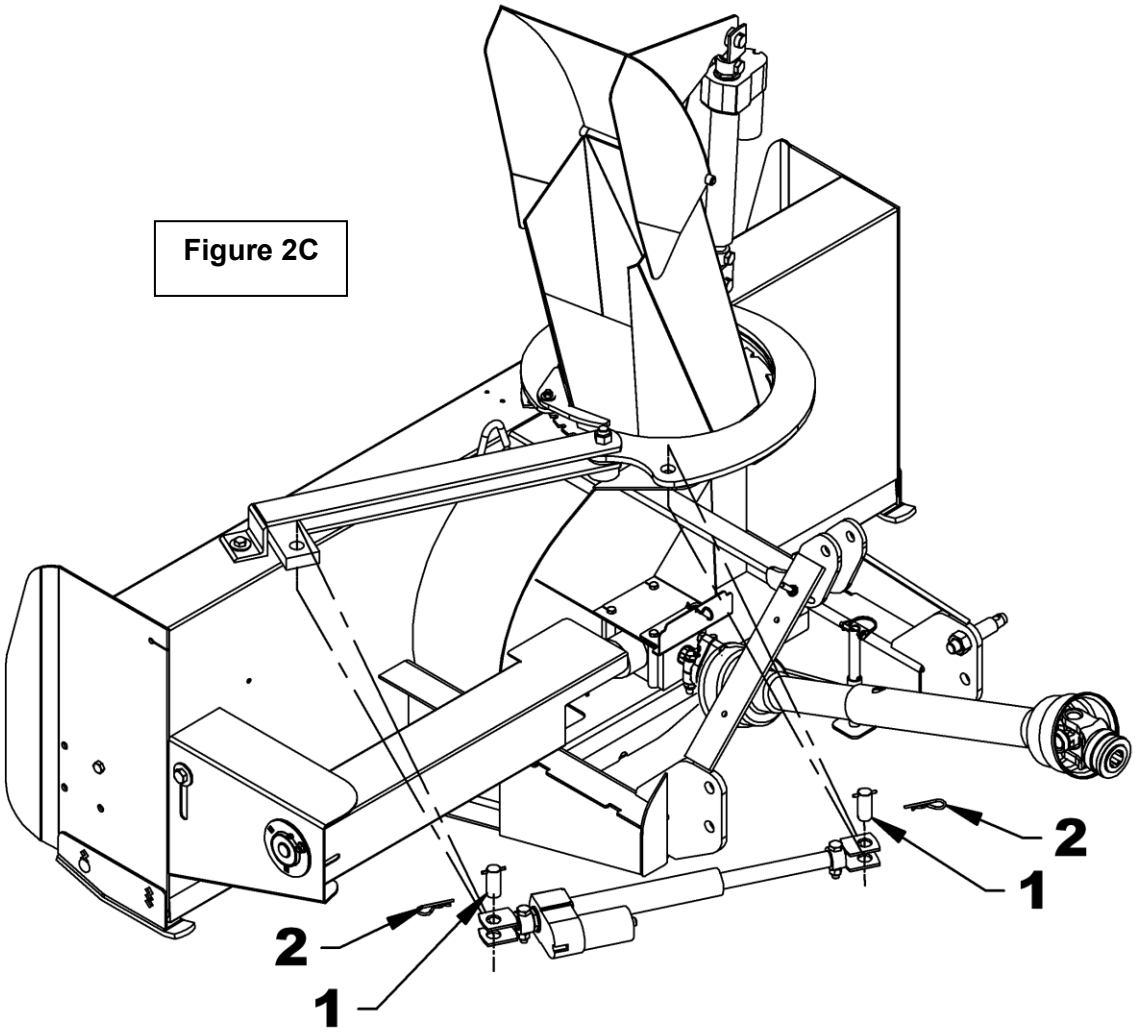

Figure 2C

7. **Figure 3:** Insert the switch (item 1) in the switchbox (item 2), secure with the two nuts (items 3) provided with the switch, and screw the rubber cap (item 4) in the order shown on figure. Insert the plastic cap (item 5) in the free hole of the switchbox (if needed).
8. **Figure 3:** Install the switchbox at a convenient location for easy access when operating the snowblower. Secure using three #10 x 1/2" self-drilling screws (item 6). Leave a hole to install the ground wire. Avoid placing the switch box where wires are already installed as they could be damaged.
9. **Figure 1:** Connect the ring terminal of the ground wire (item 1) to a ground screw of the vehicle.
10. **Figure 1:** Connect the fuse wire (item 3) to the tractor switch wire using a tap connector (item 5).
11. **Figure 1:** Connect the actuator double wire (item 4) to the actuator (item 7).
12. **Figure 1:** Cover all wires with the loom (item 6) and attach with tie wrap.

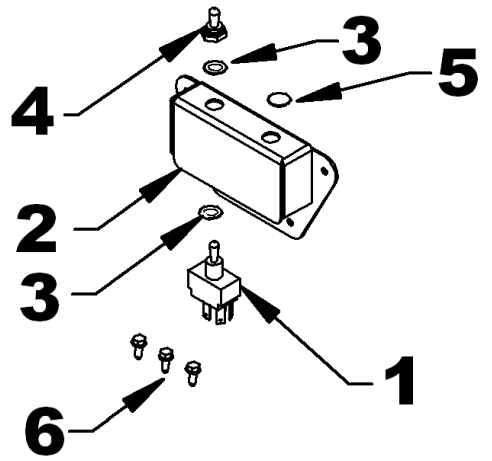

Figure 3

PARTS

REF.	DESCRIPTION	QTY	PART #
1	Actuator	1	662983
2	Switchbox	1	666048
3	Switch	1	663383
4	Rubber cap	1	658666
5	Plastic cap	1	662530
6	Clevis – rod	1	666049
7	Clevis – base	1	666050
8	Pin 1"	2	666057
9	Ground wire 72" (black)	1	666054
10	Tap connector	1	656665
11	Fuse wire72" (red)	1	666055
12	Actuator wire assembly	1	666056
13	Spring pin 3/16" x 1 3/4", black	2	1600009
14	Hairpin 4mm x 80mm, Plated	2	1800002
15	Self-drilling screw #10 x 1/2"	4	3200011
16	Bolt hex. 1/2"NC x 2 1/2", Plated	2	0100076
17	Nylon insert locknut 1/2"NC, Plated	2	1000011
18	Loom 3/8" x 420"	1	666053
19	Nylon insert locknut 5/16"NC, Plated	2	1000005
20	Nylon insert locknut 8" lg x 4 mm	5	2100003
21	Deflector bracket	1	669826
22	Base bracket	1	669825
23	Allen setscrew, flat head 5/16"NC x 3/4"	8	0700003
24	Serrated flange nut 5/16"NC, Plated	8	0900036
25	Carriage bolt 5/16"NC x 3/4" Plated	2	0300002

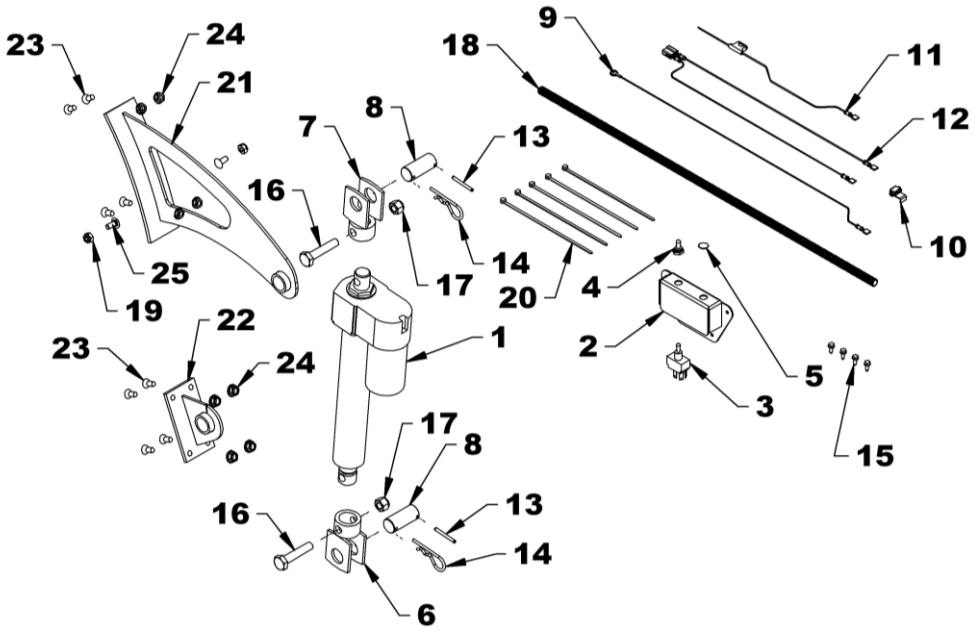
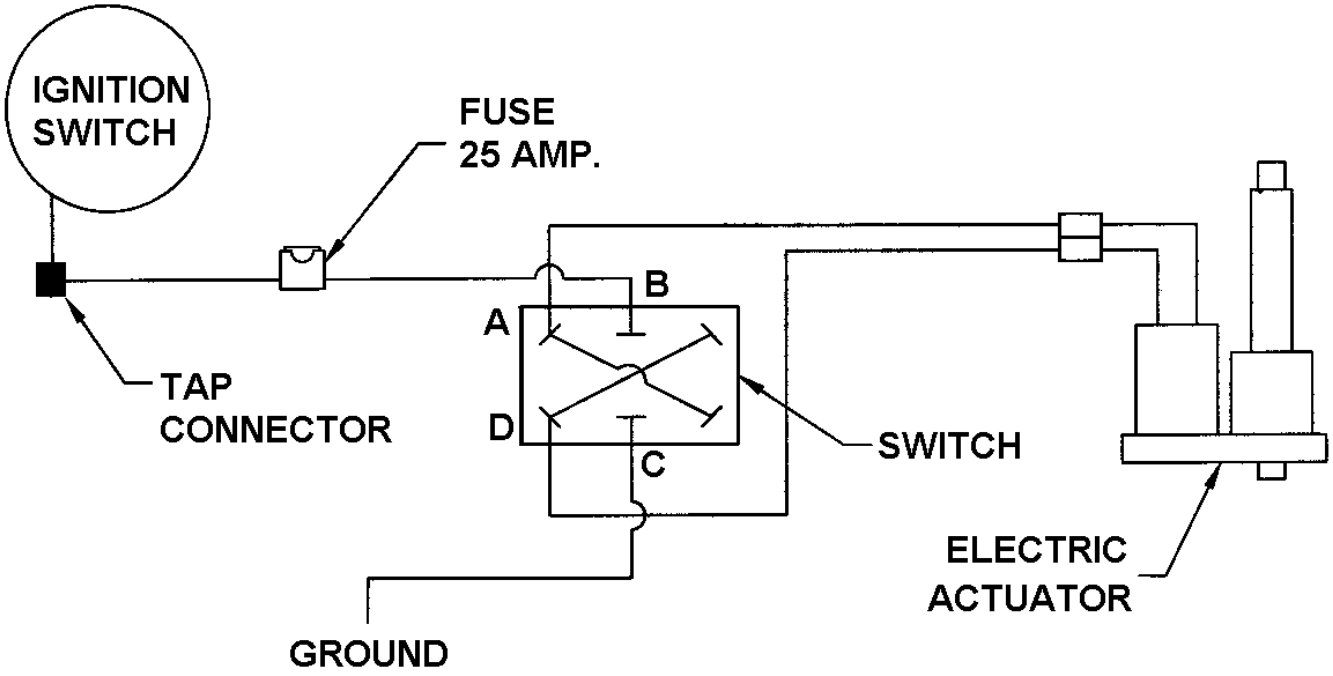
ELECTRIC DIAGRAM